DISCO™

INFORMATION

PENDANT

PROJECT: _____ TYPE: _____ QTY: _____

PRODUCT #	**350DI**
APPLICATION	• PENDANT MOUNT • INDOOR RATED
DIMENSIONS	• 8”, 18”, AND 24” (20CM, 46CM, AND 61CM)
ILLUMINATION	• DIRECT • LED 90 CRI • 2,622 - 2,657 LUMEN RANGE
LED DRIVER	• CANOPY
DIFFUSERS	• HIGH EFFICIENCY ACRYLIC
MOUNTING	• 120” (30.5CM) BLACK OR WHITE CORD WITH AC CABLES • 120” (30.5CM) POWER OVER SUSPENSION
CONSTRUCTION	• ALUMINUM
FINISHES	• AVAILABLE IN SEVERAL TMS POWDER COATED FINISHES • CUSTOM RAL FINISHES AVAILABLE
DIMMING	• 0-10V (1%) DIMMING (120 - 277V) • LINE VOLTAGE/TRIAC/ELV (120V ONLY) • LUTRON HI-LUME (1%) DIMMING (120 - 277V)
WEIGHT	• 4 LBS. - 8.5 LBS.

DIRECT

INDOOR

Intertek

DISCO™

CONFIGURATOR

PENDANT

PROJECT: _____ TYPE: _____ QTY: _____

350DI – ____ – ____ – ____ – ____ – ____ – ____ – ____ – ____ – ____ – ____ – ____

1 2 3 4 5 6 7 8 9 10

1.	8	18	24
DIAMETER	8” DIA. (20CM)	18” DIA. (46CM)	24” DIA. (61CM)
LED (W)	20W	30W	30W
LUMENS	1718	2622	2657

2.	H	M	L	C: _____[1]
OUTPUT	100% LUMENS	75% LUMENS	50% LUMENS	[CUSTOM]% LUMENS

3.	30K	35K	40K
CCT	3000	3500	4000

4.	120	277	347
VOLTAGE	120V	277V	347V

5.	BC	WC
CORD	BLACK DROP CORD	WHITE DROP CORD

6.	ADDITIONAL AND PREMIUM FINISHES AVAILABLE. SEE FINISHES CHART	F04	F05	F15	F16	F09	F31	F18
FINISH		MATTE WHITE	GLOSS WHITE	MATTE BLACK	GLOSS BLACK	PEWTER	SILVER METALLIC	SATIN ALUMINUM

7.	F04	F05	F10	F14	F15	00
INTERIOR FINISH	MATTE WHITE	GLOSS WHITE	FIRE RED	SUNSHINE YELLOW	MATTE BLACK	SAME AS OUTSIDE

8.	DIML	DIME	DIMV
DIMMING	0-10V(1%) (120-277V)	LUTRON HI-LUME (1%) (120-277V)	LINE VOLTAGE/TRIAC/ELV (120V ONLY)

9.	-----	EMR
EMERGENCY[2]	NONE	REMOTE

10.	-----	ACC
ACCESSORIES	NONE	AIRCRAFT CABLE

1.REFLECTOR COLOR INSIDE
2. 10W AT 90 MINUTES

NOTE: SOME OPTIONS MAY NOT BE COMPATIBLE WITH OTHERS. **ALL SPECIFICATIONS ARE SUBJECT TO CHANGE WITHOUT NOTICE.** CONTACT TMS LIGHTING FOR UPDATED SPECIFICATIONS.

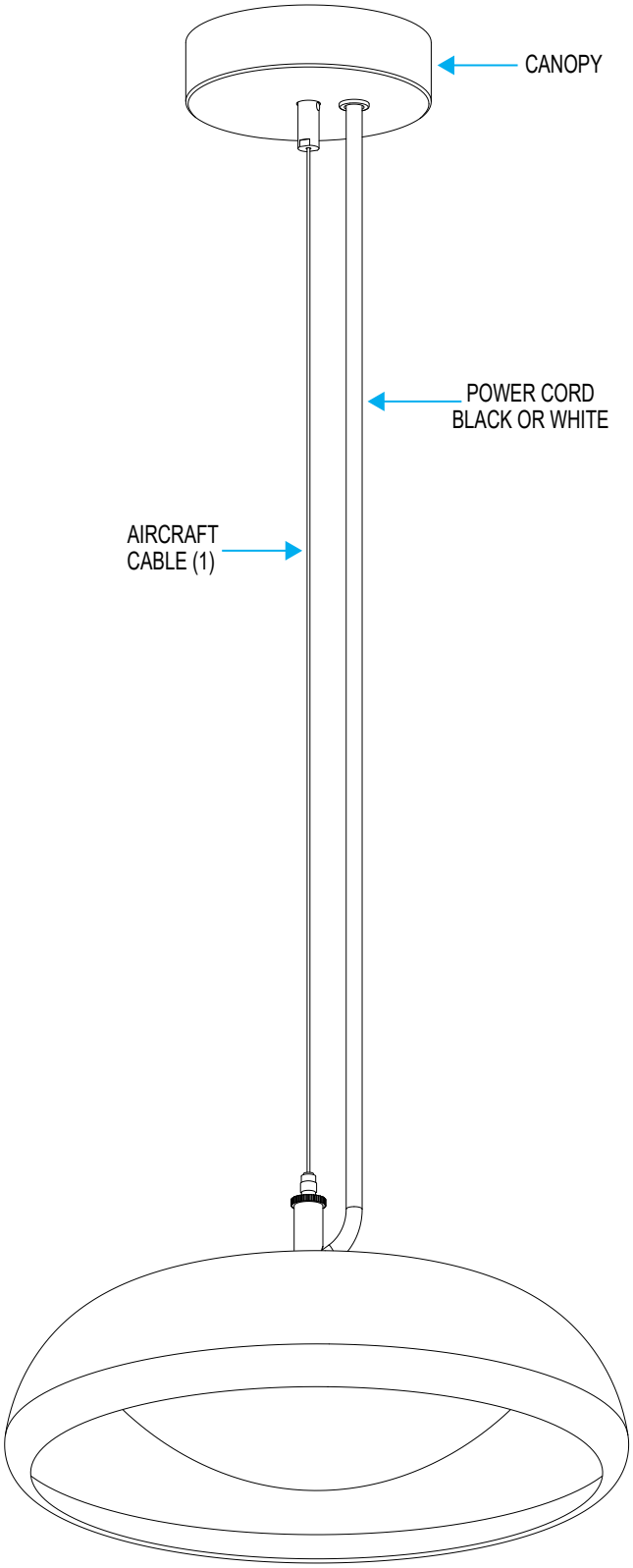

NOTE: J-BOX BY OTHERS

DROP CORD

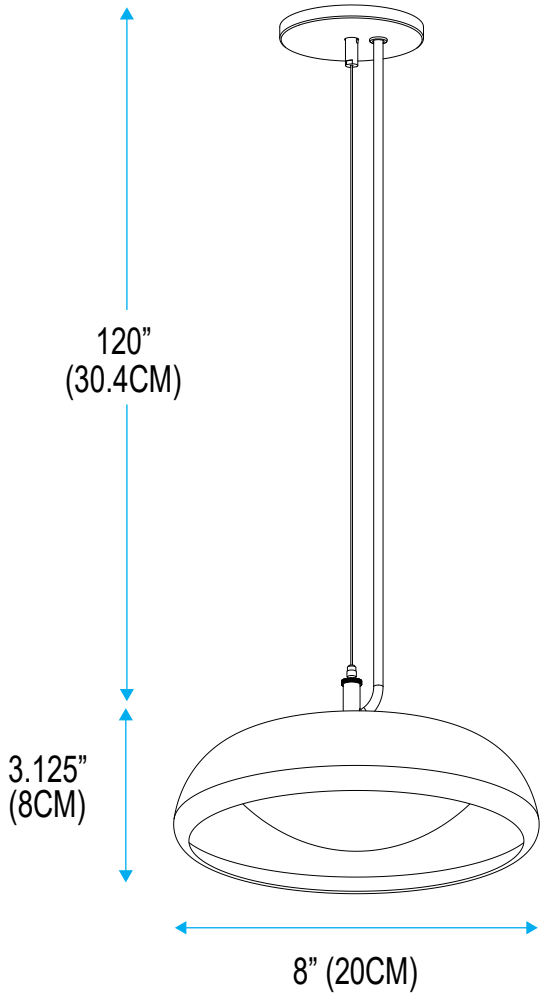

DROP CORD WITH AIRCRAFT CABLE

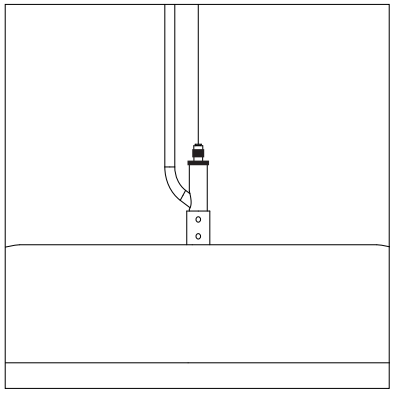

LED

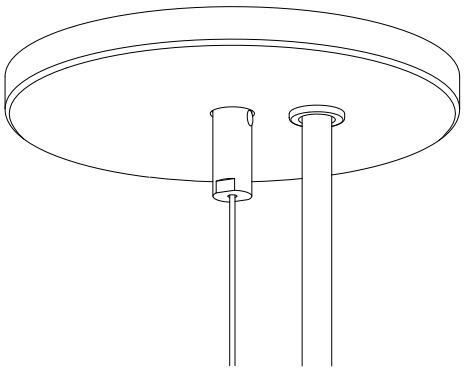

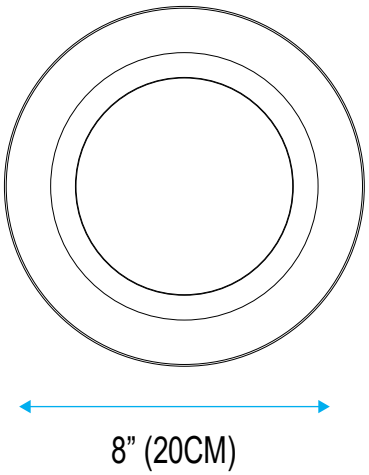

REMOTE (DRIVER AND/OR EMERGENCY)

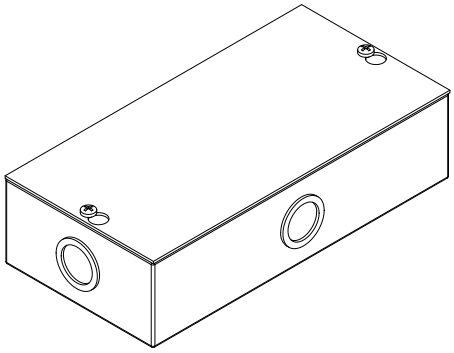

REMOTE LED DRIVER BOX

NOTE: J-BOX BY OTHERS

DISCO - 8" DIA.

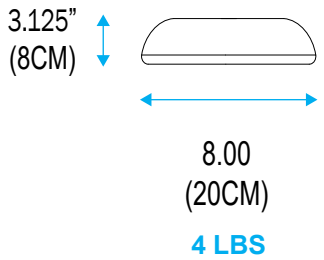

4 LBS

DISCO - 18" DIA.

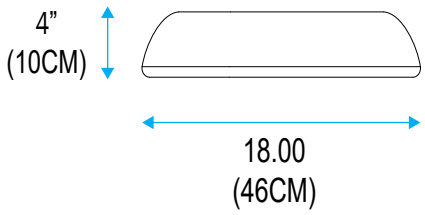

6 LBS

DISCO - 24" DIA.

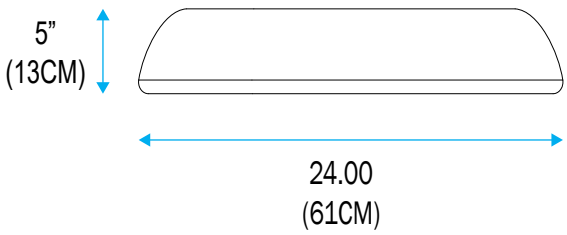

8.5 LB

DIRECT LIGHTING

PN	SIZE(DIA)	ILLUMINATION	LUMENS	WATTAGE
350DI	8	---	---	---
	18	30LED	2622	20
	24	30LED	2657	30

IES INDOOR REPORT
PHOTOMETRIC FILENAME : 350DI 18 30LED 35K F05

POLAR GRAPH

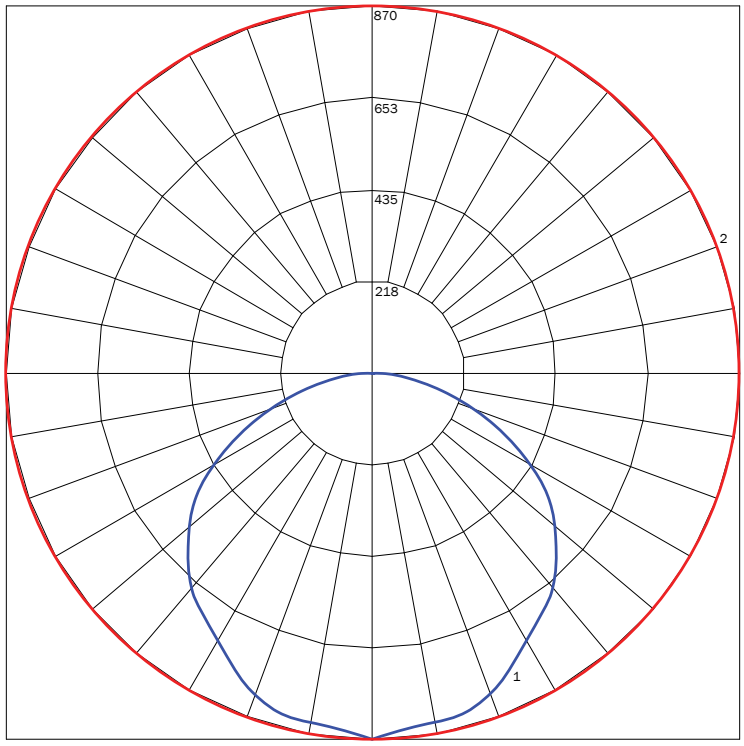

MAXIMUM CANDELA = 870.39 LOCATED AT HORIZONTAL ANGLE = 0, VERTICAL ANGLE = 0
1 - VERTICAL PLANE THROUGH HORIZONTAL ANGLES (0 - 180) (THROUGH MAX. CD.)
2 - HORIZONTAL CONE THROUGH VERTICAL ANGLE (0) (THROUGH MAX. CD.)

LUMINAIRE LUMENS	2622
TOTAL LUMINAIRE EFFICIENCY	79%
LUMINAIRE EFFECIENCY RATING	86
TOTAL LUMINAIRE WATTS	31

IES INDOOR REPORT
PHOTOMETRIC FILENAME : 350DI 24 30LED 35K F05

POLAR GRAPH

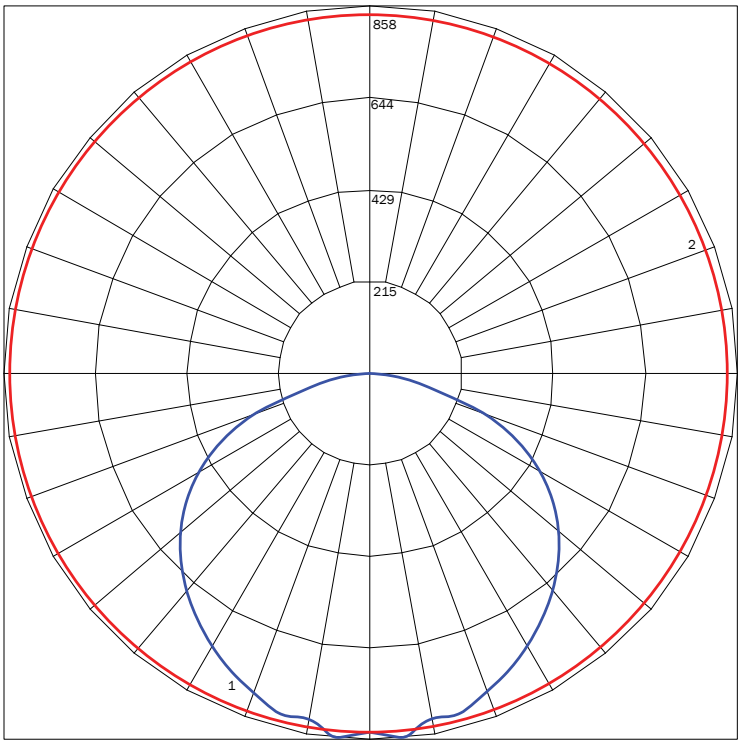

MAXIMUM CANDELA = 858.49 LOCATED AT HORIZONTAL ANGLE = 180, VERTICAL ANGLE = 5
1 - VERTICAL PLANE THROUGH HORIZONTAL ANGLES (180 - 0) (THROUGH MAX. CD.)
2 - HORIZONTAL CONE THROUGH VERTICAL ANGLE (5) (THROUGH MAX. CD.)

LUMINAIRE LUMENS	2657
TOTAL LUMINAIRE EFFICIENCY	80%
LUMINAIRE EFFECIENCY RATING	87
TOTAL LUMINAIRE WATTS	31

STANDARD

F04 MATTE WHITE

F05 GLOSS WHITE

F15 MATTE BLACK

F16 GLOSS BLACK

F09 PEWTER

F31[1] SILVER METALLIC

F18 SATIN ALUMINUM

F21 ARCH BRONZE

PREMIUM

RAL CUSTOM (RAL #)

F40 BUBBLE PINK

F10 FIRE RED

F41 ELECTRIC PURPLE

F08 MIDNIGHT BLUE

F39 AQUA BLUE

F13 FOREST GREEN

F38 MEADOW GREEN

F45 COPPER METALLIC

F06 CLAY BROWN

F11 CITRUS ORANGE

F28[1] DARK CHAMPAGNE

F22[1] HARVEST GOLD

F14 SUNSHINE YELLOW

F33[1] PYRITE BRONZE

F07 ZEUS BROWN

F32 BRONZE METALLIC

F26[1] MELTED COPPER

F25[1] MELTED GOLD

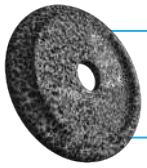
F24[1] MELTED PLATINUM

F44[1] FAUX COPPER

F43[1] FAUX GOLD

F42[1] FAUX CHROME

ACCENT

F04 MATTE WHITE

F05 GLOSS WHITE

F15 MATTE BLACK

F10 FIRE RED

F14 SUNSHINE YELLOW

00 SAME FINISH

RAL CUSTOM (RAL #)

1: FINISHES IS APPLIED TO THE INTERIOR AND EXTERIOR OF THE FIXTURE.
2: MATERIALS ARE CONSISTENT (INTERIOR & EXTERIOR). STEMS AND CANOPIES WILL BE F16 GLOSS BLACK.
NOTE: ALL FINISHES NOT MARKED WITH NOTATION (1) ARE APPLIED TO THE EXTERIOR ONLY. THE INTERIOR WILL BE F05 GLOSS WHITE.
MATTE FINISHES AVAILABLE. CONSULT FACTORY.
FINISHES ARE SUBJECT TO AVAILAB ILITY AND MAY NOT BE APPLICABLE TO ALL FIXTURES OR FOR QUICKSHIP.